945

220 240 220 240 25

30

220

920

530

140

STAY
by Maria Berntsen

STAY
by Maria Berntsen

STAY
by Maria Berntsen

DESIGN FOR THE PEOPLE
dftp

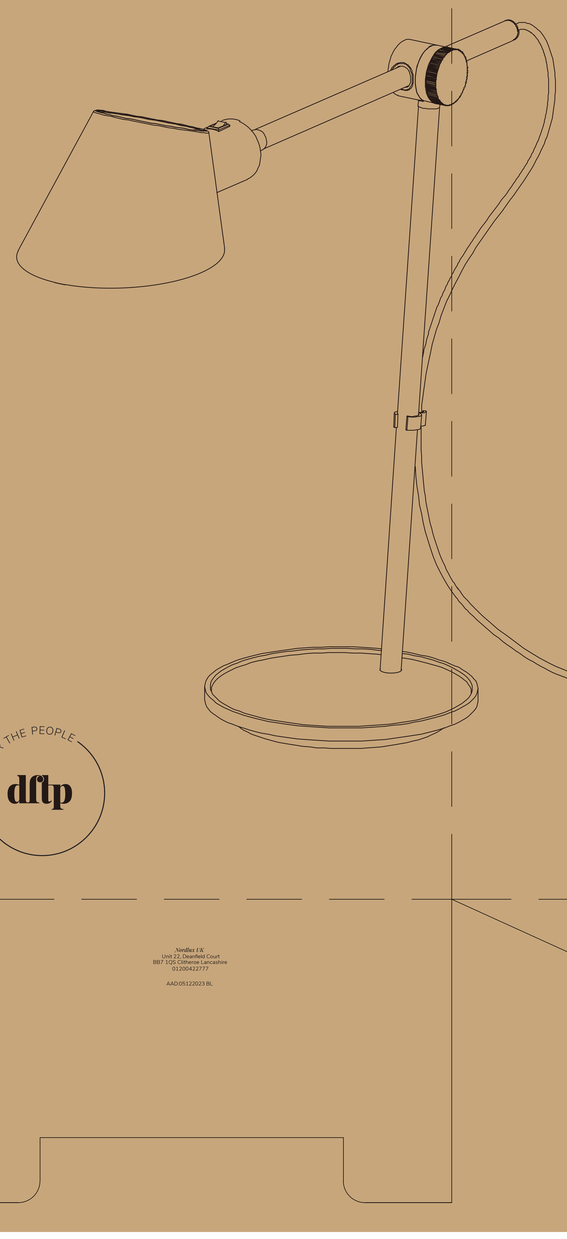

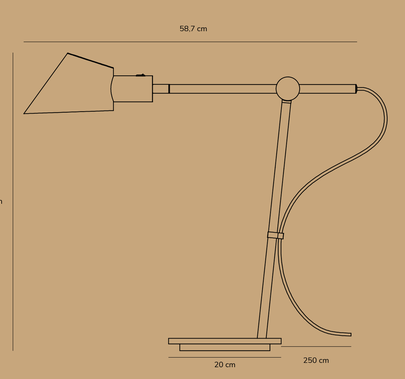

Socket type E27

Bulb not included

60 Max wattage

With her own design studio in Copenhagen, Maria Berntsen has since 1992 focused on architecture and design.

Maria Berntsen is a well-established name in the design industry and has over the years collaborated with a wide range of Danish and international companies, where her extensive experience has resulted in many successful designs.

"At the start of a new project, I look for an idea with nerve, functionality and identity. By modelling and visualizing, I test the idea, how it might be used, and its presence.

Good design communicates and establishes a dialogue with the receiver. Design is not just about functionality – it is as much about the emotional connection and impact. To me, success is when my design brings joy in the everyday lives of people"

Maria Berntsen

DESIGN FOR THE PEOPLE
dftp

Nordlux f.fr
Unit 22, Deanfield Court
BB7 1QS Clitheroe Lancashire
01200422777

AAD:05122023 BL

STAY
by Maria Berntsen

Item number	2020445003
Color	Black
Material	Metal
IP Class	IP20 - for indoor use, Class II
Voltage	220-240V ~ 50/60Hz
Cable	Textile cable: Black 250 cm non replaceable
Switch	On the fixture
Light source	E27, Max. 60W, Excl. light source

www.dftpglobal.com

Height × Width × Depth COLOR BOX (CM)	NET WEIGHT COLOR BOX (KG)
53 x 24 x 22 CM	KG
VOLUME COLOR BOX (CBM)	GROSS WEIGHT COLOR BOX (KG)
0,027,96 CBM	KG