TAIDO
by Anker Studio

Danish design duo Anker Studio consists of Jonas Poulsen and Christian Troels Hansen. For Anker Studio, good design is a design that people remember and fall in love with. Something that is part of a bigger story and that will be cherished for years. When working with lighting, Jonas and Christian find the balance between functionality and aesthetics fascinating.

Anker Studio

TAIDO
by Anker Studio

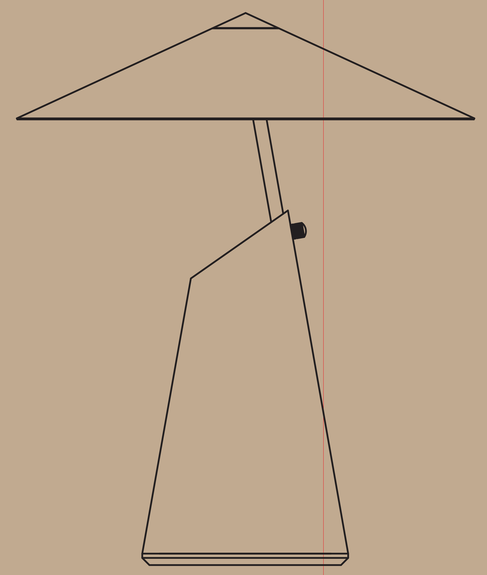

Nordisk EK
Gyde 22, Glostrup Cvr
DF 102 Glostrup Kommune
31200422177

AAO-22052023-HT

TAIDO
by Anker Studio

Socket type E27

Bulb not included

25 Max wattage

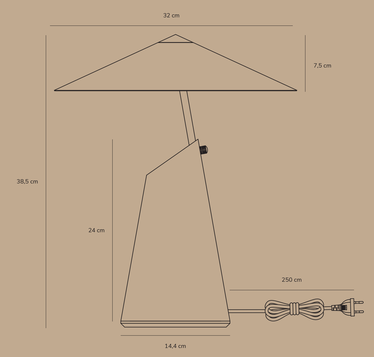

TAIDO
by Anker Studio

Item number	2320375018
Color	Brown
Material	Metal
IP Class	IP20-for indoor use, Class II
Voltage	220-240V~ 50/60Hz
Cable	Textile cable: Black 250 cm non replaceable
Light source	E27, Max. 25W, Excl. light source

www.dftpglobal.com

Nordisk E.K. Gyde 22, 2620 Glostrup, +45 70 22 42 00

5 704924 014567

Height x Width x Depth COLOR BOX (CM)	NET WEIGHT COLOR BOX (KG)
40 x 36 x 27 CM	KG
GROSS WEIGHT COLOR BOX (KG)	VOLUME COLOR BOX (CBM)
KG	0.034864 CBM

5 704924 014567

270 360 270 360 400