TAKAI

by Studio Mavro//Lefèvre by Sofie Lefèvre

Studio Mavro/Lefèvre by Sofie Lefèvre
Sofie Lefèvre finished her Design degree at the Royal College of Art in London and has since then worked passionately with lighting designs inspired by elements from history, architecture and nature.

Working with lighting comes naturally to Sofie. She understands and emphasizes the impact light has on our lives and is fascinated by the way light can change the interior: "I find it very interesting working with atmospheres created by light. There are so many aspects where my inner child can be released, playing with angles, materials and openings to create the wanted reflection or diffusion of light."

Studio Mavro//Lefèvre by Sofie Lefèvre

TAKAI

by Studio Mavro//Lefèvre by Sofie Lefèvre

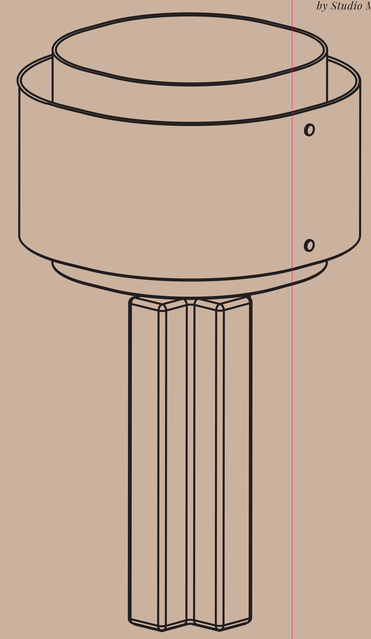

Socket type E27

Bulb not included

25 Max wattage

TAKAI

by Studio Mavro//Lefèvre by Sofie Lefèvre

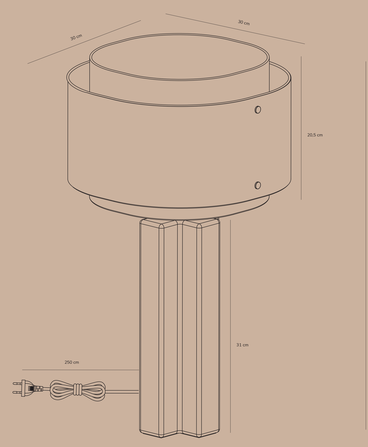

Item number	2320445018
Color	Brown
Material	Metal/Fabric
IP Class	IP20, indoor use, class II
Voltage	220-240~50/60Hz
Cable	White textile, 250cm non replaceable
Switch	On the Socket
Light source	Excl. E27, Max. 25W

www.dftghfind.com

9 704924 014581

HRD 0680 D	1x
SINGLE SIDE ACTIVE / SWITCH	TOTAL SIDE ACTIVE / LAYERS (SIZE)
1x	H 0 W 1 D 1 (H)
TOTAL SIDE ACTIVE / LAYERS (L)DX	BOX VOLUME (L) VOLUME / WEIGHT (+PIN)

Studio CR
Lisa M. C. Klaver-Van Arkum, MBO RTD
Vlaardingen
MBO 2.0/2020-01

280 550 280 550 580