ANDY | WALL LIGHTING | RUSTY BROWN

48491009

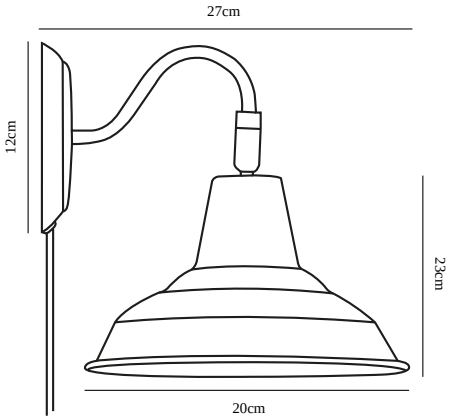

Voltage (V): 230 Volt
IP degree if the fixture includes two types of IP degree: IP20
Maximum compatible bulb wattage (W): 15W
Class (Class I, Class II, Class III): Class 2 (Double isolated)
Lampholder type (eg, E27/E14, etc): E27
Dimmerable: Yes with compatible bulb
Switch placement: On the cable

Primary material: Metal
Secondary material: Plastic
Color of the cable: Black
Length of the cable (cm): 150
Is the cable replaceable: True

Color: Rusty brown

Height (cm): 23
Shade Diameter (cm): 20
Projection (cm): 27
Tilt Angle (°): 30

EAN: 5701581457980
TUN: 2042320
Item Number: 48491009
Pcs Per Master Carton: 3

Sales Box Height (cm): 24
Sales Box Width(cm): 28
Sales Box Depth (cm): 23
Sales Box Volume m³ : 0.0155
Net weight of the luminiare (kg): 0.65

• Industrial style

The Andy wall lamp has been inspired by old vintage lamps and has an antique air about it. The rust-coloured and rough surface adds edge and personality and is a great contrast to a bright, Nordic decor.