CANIS 3-KIT 2700K | DOWNLIGHT | BRUSHED NICKEL

49300155

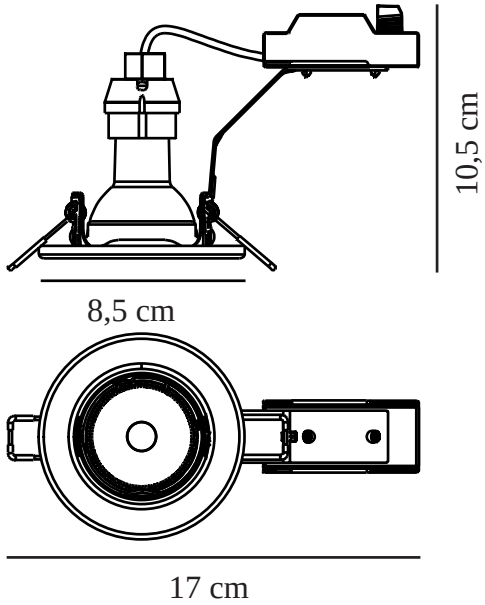

Voltage (V): 220-240 Volt
IP degree: IP20
Maximum bulb wattage (W): 35W
Class (Class 1, Class 2, Class 3): Class 2 (Double isolated)
Socket type: GU10
Dimmerable: False
Parallel connection: False

Primary material: Metal
Secondary material: Plastic
Colour: Brushed Nickel

Height (cm): 10.5
Built In Spot Diameter (cm): 8.5
Mount directly into insulation: False
Tilt Angle (°): 30

EAN: 5701581468986
Item Number: 49300155
Pcs Per Master Carton: 3

Sales Box Height (cm): 30
Sales Box Width(cm): 11
Sales Box Depth (cm): 7.5
Sales Box Volume m³ : 0.0025
Product net weight (kg): 0.399

Brightness of light (Lumen): 230
Colour temperature (Kelvin): 2700
Ra-value : 80
Lifetime (hours): 15000
Beam angle (°) : 36
Candela (cd) (for directional lamp only): 450
Energy class: F
Actual watt (W): 3.1

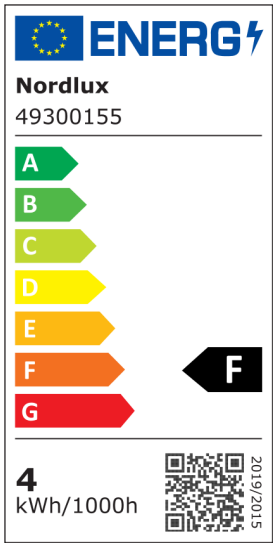

• GU10 bulb included • Directional light

Canis is a classic round downlight for indoor use, featuring a metal frame that fits beautifully into any home. Canis comes with a GU10 bulb.

The downlight emits a warm light (2700 kelvin), which is particularly suitable for e.g. the living room, dining room or bedroom. The downlight is adjustable, making it highly functional as you can direct the light wherever you need it.