AVENUE | WALL LIGHTING | BRUSHED STEEL

76551132

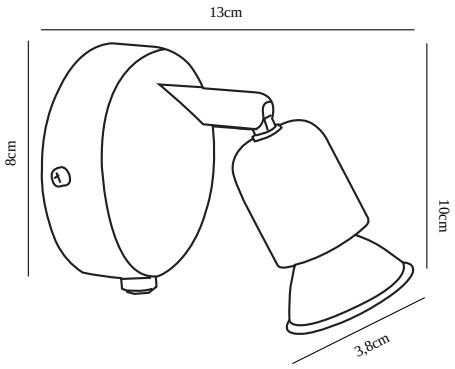

Voltage (V): 230 Volt
IP degree if the fixture includes two types of IP degree: IP20
Maximum compatible bulb wattage (W): 3W
Class (Class I, Class II, Class III): Class 1 (Earth contact)
Lampholder type (eg, E27/E14, etc): GU10

Primary material: Metal

Color: Brushed steel

Height (cm): 10
Width (cm): 8
Shade Diameter (cm): 3.8
Projection (cm): 13

EAN: 5701581232488
TUN: 1557525
Item Number: 76551132
Pcs Per Master Carton: 6

Sales Box Height (cm): 10
Sales Box Width(cm): 10
Sales Box Depth (cm): 12.5
Sales Box Volume m³ : 0.0012
Net weight of the luminiare (kg): 0.49

Useful Lumen (lm): 230
Color Temperature (K): 3000
Ra-value : 80
Lifetime (h): 15000
Spread Angle (°) (beam angle of luminaire): 120
Candela (cd) (for directional lamp only): 0
Energy Class: F

• Classic functional style

This wall light, in classic design from Nordlux, provides a beautiful light suitable for most rooms in the home. The lamp head can be rotated in all directions, giving the light a wide range of uses. For example, use it as a reading or bedside light in the bedroom, or in a teenager's room.