nordlux®

ARTIST 25
Dessin: 83083003
Db: 1850306
Sort/Schwarz
Black/Svart
Noir

nordlux®

ARTIST 25
designed by
Bønnelycke mdd

Bønnelycke is driven by an unsurpressable urge and desire to work constructively and innovatively. He started his career in 1988 with the design of lamps, furniture and interior spaces. Quickly, he became known as an unconventional architect with no whims and fancies.

nordlux®

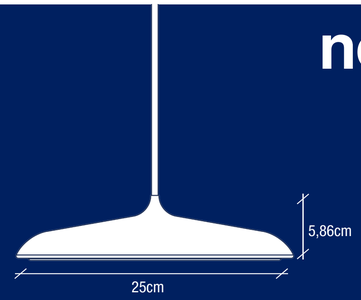

ARTIST 25
Dessin: 83083003
Db: 1850306
Sort/Schwarz
Black/Svart
Noir

IP20 — Dobbelt isoleret (kl. 2) / Doppelte Isolierung / Double insulation / Dubbel isolering / Double protection

FIXED LED — M/P — Metal/Glæst / Metall/Kunststoff / Metal/Plastic material / Metall/Plastik / Metal/Plastique

230V — Indoor — Egnet til indendørs brug / Geeignet für Innen / Suitable for Indoor / Lämplig att användas inomhus / Indiqué pour usage intérieur

CE — Inkl. 14W driver / Mit 14W Driver / Incl. 14W driver / Inkl. 14W driver / Avec 14W driver Indus

DEN ÅBNE ENDE — Inkl. baldakin og 300 cm ledning / Inkl. Baldachin und 300 cm Leitung / Incl. baldachin and 300 cm cable / Inkl. baldakin och 300 cm ledning / Baldaquin et câble de 300 cm indus

Dimmbar / Dimmable / Dimbar / Variable / Dæmpbar

nordlux® 83083003

This luminaire contains built-in LED lamps.

The LED lamps cannot be changed in the luminaire.

874/2012

PLEASE NOTE LED MODULE IS FIXED IN LAMP

120°

Hg MERCURY

2700 KELVIN

Ra 80

8000 ON/OFF

95%@ warmtup < 0,8 sec Light up: < 0,85sec

2000 HOURS

LED 14W

1000 LUMEN

www.nordlux.com/safedisp/dk
www.nordlux.com/safedisp/de
www.nordlux.com/safedisp/uk
www.nordlux.com/safedisp/se
www.nordlux.com/safedisp/fr

www.nordlux.com
Nordlux A/S Rønhaveparken 8 DK-9230 Aalborg SV

5 701581 345485

AAD: 13072016 RO